5 copies 7/16

TYPE-1900

MULTI-FREQUENCY GENERATOR

INSTRUCTION BOOK

•

Tel-Instrument Co. Inc.
50 PATERSON AVENUE
EAST RUTHERFORD, N. J.

5 copies 2/16

TYPE-1900
MULTI-FREQUENCY GENERATOR

INSTRUCTION BOOK

Tel-Instrument Co. Inc.
50 PATERSON AVENUE
EAST RUTHERFORD, N. J.

TEL INSTRUMENT TYPE 1900
MULTI-FREQUENCY GENERATOR

INSTRUCTION BOOK

GENERAL

The type 1900 Multi-Frequency Generator is a 10 frequency, 400 cps modulated, crystal controlled oscillator intended for the preliminary alignment of stagger tuned IF amplifiers of television receivers. Crystals ranging from 17 to 40 mc can be provided to exact frequencies specified. Crystals are arranged in sequence specified by the customer. The frequency accuracy is better than .05% and the modulation is adjustable from zero to approximately 30% by an internal control. Frequency selection is instantly accomplished by means of a special coin silver contact rotary switch actuated by a heavy duty pulsing solenoid and front panel push buttom selector switch. The output signal is 0.5 volts across a 75 ohm terminated output cable 4 feet long. The output signal is capable of attenuation over a range of 1000 to 1. The power supply is electronically regulated to assure complete freedom from line voltage fluctuations from 105 to 125 volts.

The instrument is contained in a grey wrinkle finished cabinet 12-1/2" wide, 9-1/2" deep, and 8" high. Shielding is adequate to prevent excessive radiation. New crystal frequencies may be installed at any time by returning the unit to the factory. The only charge is for the new crystals.

GUARANTEE

This instrument is guaranteed to be free from any defect in material and workmanship, except vacuum tubes, fuses, and batteries, that may develop within a period of 90 days from date of purchase under the terms of the standard RMA guarantee. Any part or parts that prove defective within this period will be replaced without charge when subjected to examination at our factory providing such defect is, in our opinion, due to faulty workmanship or material, and not caused by tampering, abuse, or normal wear.

Tel-Instrument Company, Inc. reserves the right to make changes in design or add improvements to instruments manufactured by them without incurring any obligation to install such changes or improvements in any instrument previously purchased.

THEORY OF OPERATION

This unit utilizes a 12AU7 dual triode as a cathode-coupled crystal oscillator. Referring to the schematic diagram, the left hand section of the tube operates as a cathode follower, cathode driving the grounded-grid right-hand section through the crystal.

At the series resonant frequency of the crystal, it appears as a low resistance (of about 50 ohms), and hence sufficient drive to the grounded grid section is obtained to sustain oscillation. At frequencies slightly removed, the crystal impedance rises, and hence the drive drops. At frequencies far removed from resonance, the impedance of the plate tank of the grounded-grid section drops, preventing spurious oscillation. Unused oscillator plate coils are shorted out to eliminate suck-outs. The output cable termination has a .01 mfd blocking condenser built in, so that connection can be made to any point in the receiver.

The audio oscillator is of the phase-shift type. The resistors and condensers forming the plate-to-grid coupling are chosen so that the net phase shift is 180° at approximately 400 cps. This phase shift, plus the 180° contributed by the tube, satisfies one of the conditions of oscillation, the other being met by designing the amplifier for sufficient gain to offset the loss in the phase-shift network. The second half of the audio oscillator tube is used as a Heising modulator for the crystal oscillator, with modulation percentage controllable from 0 to 30% by adjusting R-18.

The power supply employs a full wave rectifier, feeding a standard degenerative voltage regulator. The frequency-changing rotary switch is operated by a pushbutton operated pulsing relay, which receives its operating power from a separate selenium rectifier and filter condenser. A spark suppression circuit is placed across the relay-stopping contacts to eliminate arcing.

MAINTENANCE

All of the tubes in this unit, with the exception of the RF oscillator, may be removed for testing by simply opening the top cover of the cabinet. In order to remove the RF oscillator tube, it is necessary to remove the unit from the cabinet and remove the bottom plate. Replacement of the RF oscillator might necessitate retuning of the oscillator coils. This is accomplished by removing the unit from the cabinet and removing the shield plate on the left hand side of the RF unit. Connect an RF voltmeter across the output cable, set the attenuators at 1:1, and the variable attenuator at 10. Depress pushbutton 1, adjust the slug at about 7 o'clock position for maximum output. Depress pushbutton 2, and similarly adjust the next clockwise screw. Continue this procedure for each of the remaining positions, and then replace the shield plate.

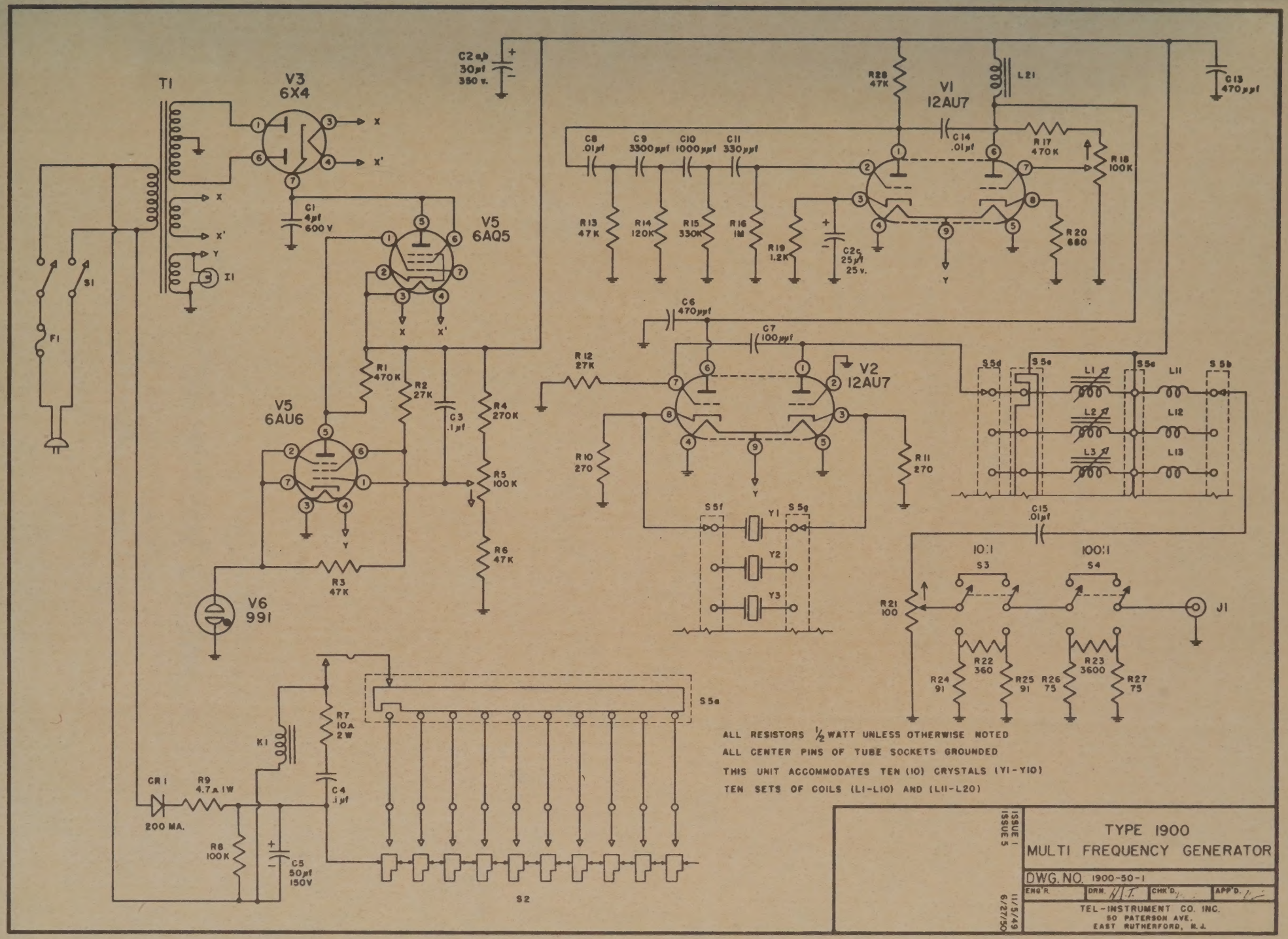

ALL RESISTORS ½ WATT UNLESS OTHERWISE NOTED

ALL CENTER PINS OF TUBE SOCKETS GROUNDED

THIS UNIT ACCOMMODATES TEN (10) CRYSTALS (Y1-Y10)

TEN SETS OF COILS (L1-L10) AND (L11-L20)

ISSUE 1
ISSUE 5
11/5/49
6/27/50

TYPE 1900
MULTI FREQUENCY GENERATOR

DWG. NO. 1900-50-1

ENG'R. | DRN. H.T. | CHK'D. | APP'D.

TEL-INSTRUMENT CO. INC.
50 PATERSON AVE.
EAST RUTHERFORD, N.J.

5 copies 9/16

TYPE-1900
MULTI-FREQUENCY GENERATOR

INSTRUCTION BOOK

•

Tel-Instrument Co. Inc.
30 PATERSON AVENUE
EAST RUTHERFORD, N. J.

TEL INSTRUMENT TYPE 1900
MULTI-FREQUENCY GENERATOR

INSTRUCTION BOOK

GENERAL

The type 1900 Multi-Frequency Generator is a 10 frequency, 400 cps modulated, crystal controlled oscillator intended for the preliminary alignment of stagger tuned IF amplifiers of television receivers. Crystals ranging from 17 to 40 mc can be provided to exact frequencies specified. Crystals are arranged in sequence specified by the customer. The frequency accuracy is better than .05% and the modulation is adjustable from zero to approximately 30% by an internal control. Frequency selection is instantly accomplished by means of a special coin silver contact rotary switch actuated by a heavy duty pulsing solenoid and front panel push buttom selector switch. The output signal is 0.5 volts across a 75 ohm terminated output cable 4 feet long. The output signal is capable of attenuation over a range of 1000 to 1. The power supply is electronically regulated to assure complete freedom from line voltage fluctuations from 105 to 125 volts.

The instrument is contained in a grey wrinkle finished cabinet 12-1/2" wide, 9-1/2" deep, and 8" high. Shielding is adequate to prevent excessive radiation. New crystal frequencies may be installed at any time by returning the unit to the factory. The only charge is for the new crystals.

GUARANTEE

This instrument is guaranteed to be free from any defect in material and workmanship, except vacuum tubes, fuses, and batteries, that may develop within a period of 90 days from date of purchase under the terms of the standard RMA guarantee. Any part or parts that prove defective within this period will be replaced without charge when subjected to examination at our factory providing such defect is, in our opinion, due to faulty workmanship or material, and not caused by tampering, abuse, or normal wear.

Tel-Instrument Company, Inc. reserves the right to make changes in design or add improvements to instruments manufactured by them without incurring any obligation to install such changes or improvements in any instrument previously purchased.

THEORY OF OPERATION

This unit utilizes a 12AU7 dual triode as a cathode-coupled crystal oscillator. Referring to the schematic diagram, the left hand section of the tube operates as a cathode follower, cathode driving the grounded-grid right-hand section through the crystal.

At the series resonant frequency of the crystal, it appears as a low resistance (of about 50 ohms), and hence sufficient drive to the grounded grid section is obtained to sustain oscillation. At frequencies slightly removed, the crystal impedance rises, and hence the drive drops. At frequencies far removed from resonance, the impedance of the plate tank of the grounded-grid section drops, preventing spurious oscillation. Unused oscillator plate coils are shorted out to eliminate suck-outs. The output cable termination has a .01 mfd blocking condenser built in, so that connection can be made to any point in the receiver.

The audio oscillator is of the phase-shift type. The resistors and condensers forming the plate-to-grid coupling are chosen so that the net phase shift is 180° at approximately 400 cps. This phase shift, plus the 180° contributed by the tube, satisfies one of the conditions of oscillation, the other being met by designing the amplifier for sufficient gain to offset the loss in the phase-shift network. The second half of the audio oscillator tube is used as a Heising modulator for the crystal oscillator, with modulation percentage controllable from 0 to 30% by adjusting R-18.

The power supply employs a full wave rectifier, feeding a standard degenerative voltage regulator. The frequency-changing rotary switch is operated by a pushbutton operated pulsing relay, which receives its operating power from a separate selenium rectifier and filter condenser. A spark suppression circuit is placed across the relay-stopping contacts to eliminate arcing.

MAINTENANCE

All of the tubes in this unit, with the exception of the RF oscillator, may be removed for testing by simply opening the top cover of the cabinet. In order to remove the RF oscillator tube, it is necessary to remove the unit from the cabinet and remove the bottom plate. Replacement of the RF oscillator might necessitate retuning of the oscillator coils. This is accomplished by removing the unit from the cabinet and removing the shield plate on the left hand side of the RF unit. Connect an RF voltmeter across the output cable, set the attenuators at 1:1, and the variable attenuator at 10. Depress pushbutton 1, adjust the slug at about 7 o'clock position for maximum output. Depress pushbutton 2, and similarly adjust the next clockwise screw. Continue this procedure for each of the remaining positions, and then replace the shield plate.

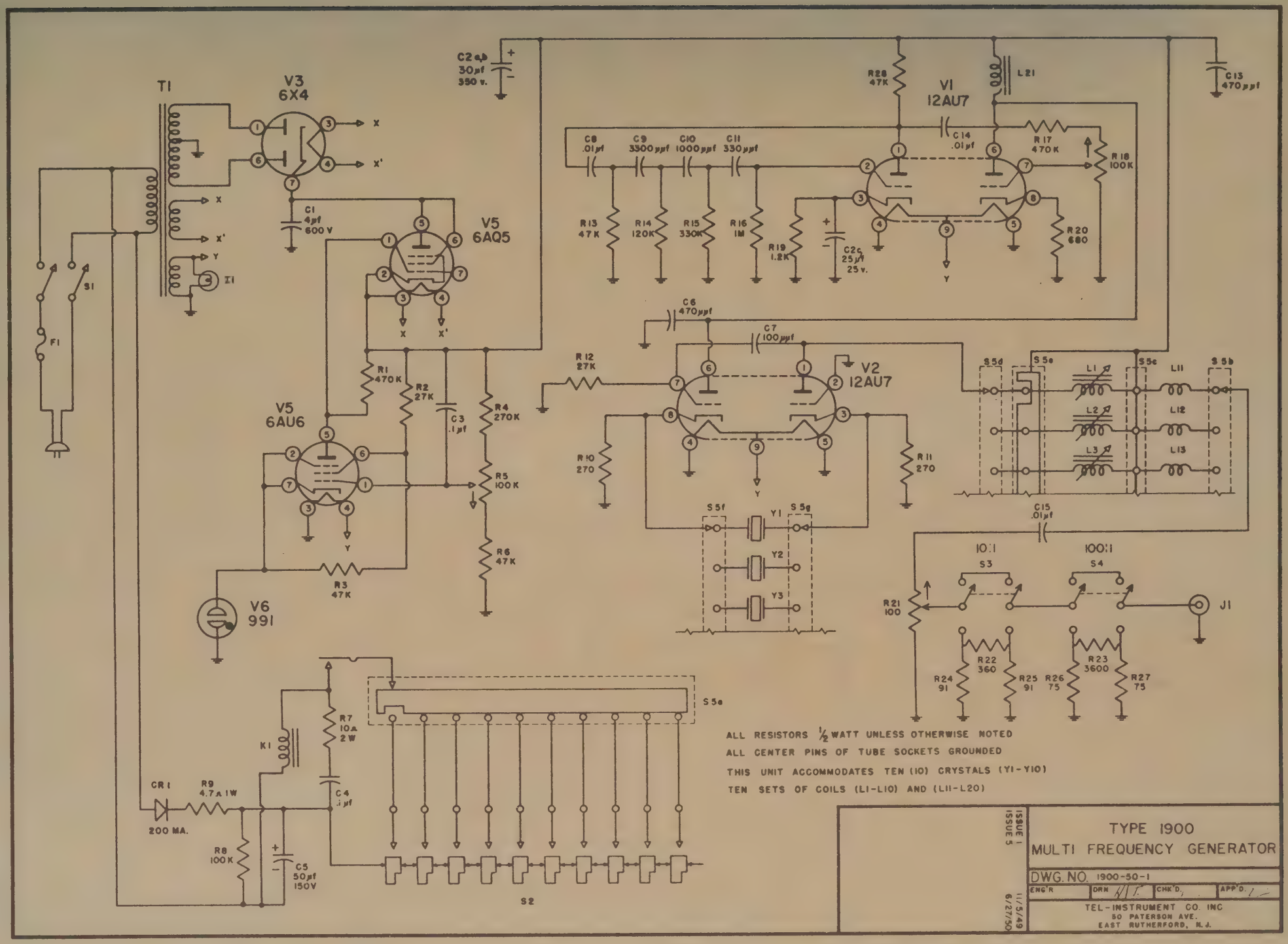
T1
V3
6X4
C2 a,b
30µf
350 v.
R28
47K
V1
12AU7
L21
C13
470µµf
C8
.01µf
C9
3300µµf
C10
1000µµf
C11
330µµf
C14
.01µf
R17
470K
R18
100K
C1
4µf
600 V
V5
6AQ5
R13
47K
R14
120K
R15
330K
R16
1M
R19
1.2K
C2c
25µf
25 v.
R20
680
S1
F1
I1
C6
470µµf
C7
100µµf
R12
27K
V2
12AU7
R1
470K
R2
27K
C3
.1µf
R4
270K
V5
6AU6
R5
100K
R10
270
R11
270
S5d
S5e
S5c
S5b
L1
L2
L3
L11
L12
L13
R6
47K
R3
47K
V6
991
S5f
S5g
Y1
Y2
Y3
C15
.01µf
10:1
S3
100:1
S4
R21
100
J1
R22
360
R23
3600
R24
91
R25
91
R26
75
R27
75
S5a
R7
10Ω
2W
K1
C4
.1µf
CR1
200 MA.
R9
4.7Ω 1W
R8
100K
C5
50µf
150V
S2
ALL RESISTORS ½ WATT UNLESS OTHERWISE NOTED
ALL CENTER PINS OF TUBE SOCKETS GROUNDED
THIS UNIT ACCOMMODATES TEN (10) CRYSTALS (Y1-Y10)
TEN SETS OF COILS (L1-L10) AND (L11-L20)
ISSUE 1
ISSUE 5
11/5/49
6/27/50
TYPE 1900
MULTI FREQUENCY GENERATOR
DWG. NO. 1900-50-1
ENG'R
DRN
CHK'D.
APP'D.
TEL-INSTRUMENT CO. INC
50 PATERSON AVE.
EAST RUTHERFORD, N.J.

Scopus 1/16

TYPE-1900

MULTI-FREQUENCY GENERATOR

INSTRUCTION BOOK

Tel-Instrument Co. Inc.
50 PATERSON AVENUE
EAST RUTHERFORD, N. J.

TEL INSTRUMENT TYPE 1900
MULTI-FREQUENCY GENERATOR

INSTRUCTION BOOK

GENERAL

The type 1900 Multi-Frequency Generator is a 10 frequency, 400 cps modulated, crystal controlled oscillator intended for the preliminary alignment of stagger tuned IF amplifiers of television receivers. Crystals ranging from 17 to 40 mc can be provided to exact frequencies specified. Crystals are arranged in sequence specified by the customer. The frequency accuracy is better than .05% and the modulation is adjustable from zero to approximately 30% by an internal control. Frequency selection is instantly accomplished by means of a special coin silver contact rotary switch actuated by a heavy duty pulsing solenoid and front panel push buttom selector switch. The output signal is 0.5 volts across a 75 ohm terminated output cable 4 feet long. The output signal is capable of attenuation over a range of 1000 to 1. The power supply is electronically regulated to assure complete freedom from line voltage fluctuations from 105 to 125 volts.

The instrument is contained in a grey wrinkle finished cabinet 12-1/2" wide, 9-1/2" deep, and 8" high. Shielding is adequate to prevent excessive radiation. New crystal frequencies may be installed at any time by returning the unit to the factory. The only charge is for the new crystals.

GUARANTEE

This instrument is guaranteed to be free from any defect in material and workmanship, except vacuum tubes, fuses, and batteries, that may develop within a period of 90 days from date of purchase under the terms of the standard RMA guarantee. Any part or parts that prove defective within this period will be replaced without charge when subjected to examination at our factory providing such defect is, in our opinion, due to faulty workmanship or material, and not caused by tampering, abuse, or normal wear.

Tel-Instrument Company, Inc. reserves the right to make changes in design or add improvements to instruments manufactured by them without incurring any obligation to install such changes or improvements in any instrument previously purchased.

THEORY OF OPERATION

This unit utilizes a 12AU7 dual triode as a cathode-coupled crystal oscillator. Referring to the schematic diagram, the left hand section of the tube operates as a cathode follower, cathode driving the grounded-grid right-hand section through the crystal.

At the series resonant frequency of the crystal, it appears as a low resistance (of about 50 ohms), and hence sufficient drive to the grounded grid section is obtained to sustain oscillation. At frequencies slightly removed, the crystal impedance rises, and hence the drive drops. At frequencies far removed from resonance, the impedance of the plate tank of the grounded-grid section drops, preventing spurious oscillation. Unused oscillator plate coils are shorted out to eliminate suck-outs. The output cable termination has a .01 mfd blocking condenser built in, so that connection can be made to any point in the receiver.

The audio oscillator is of the phase-shift type. The resistors and condensers forming the plate-to-grid coupling are chosen so that the net phase shift is 180° at approximately 400 cps. This phase shift, plus the 180° contributed by the tube, satisfies one of the conditions of oscillation, the other being met by designing the amplifier for sufficient gain to offset the loss in the phase-shift network. The second half of the audio oscillator tube is used as a Heising modulator for the crystal oscillator, with modulation percentage controllable from 0 to 30% by adjusting R-18.

The power supply employs a full wave rectifier, feeding a standard degenerative voltage regulator. The frequency-changing rotary switch is operated by a pushbutton operated pulsing relay, which receives its operating power from a separate selenium rectifier and filter condenser. A spark suppression circuit is placed across the relay-stopping contacts to eliminate arcing.

MAINTENANCE

All of the tubes in this unit, with the exception of the RF oscillator, may be removed for testing by simply opening the top cover of the cabinet. In order to remove the RF oscillator tube, it is necessary to remove the unit from the cabinet and remove the bottom plate. Replacement of the RF oscillator might necessitate retuning of the oscillator coils. This is accomplished by removing the unit from the cabinet and removing the shield plate on the left hand side of the RF unit. Connect an RF voltmeter across the output cable, set the attenuators at 1:1, and the variable attenuator at 10. Depress pushbutton 1, adjust the slug at about 7 o'clock position for maximum output. Depress pushbutton 2, and similarly adjust the next clockwise screw. Continue this procedure for each of the remaining positions, and then replace the shield plate.

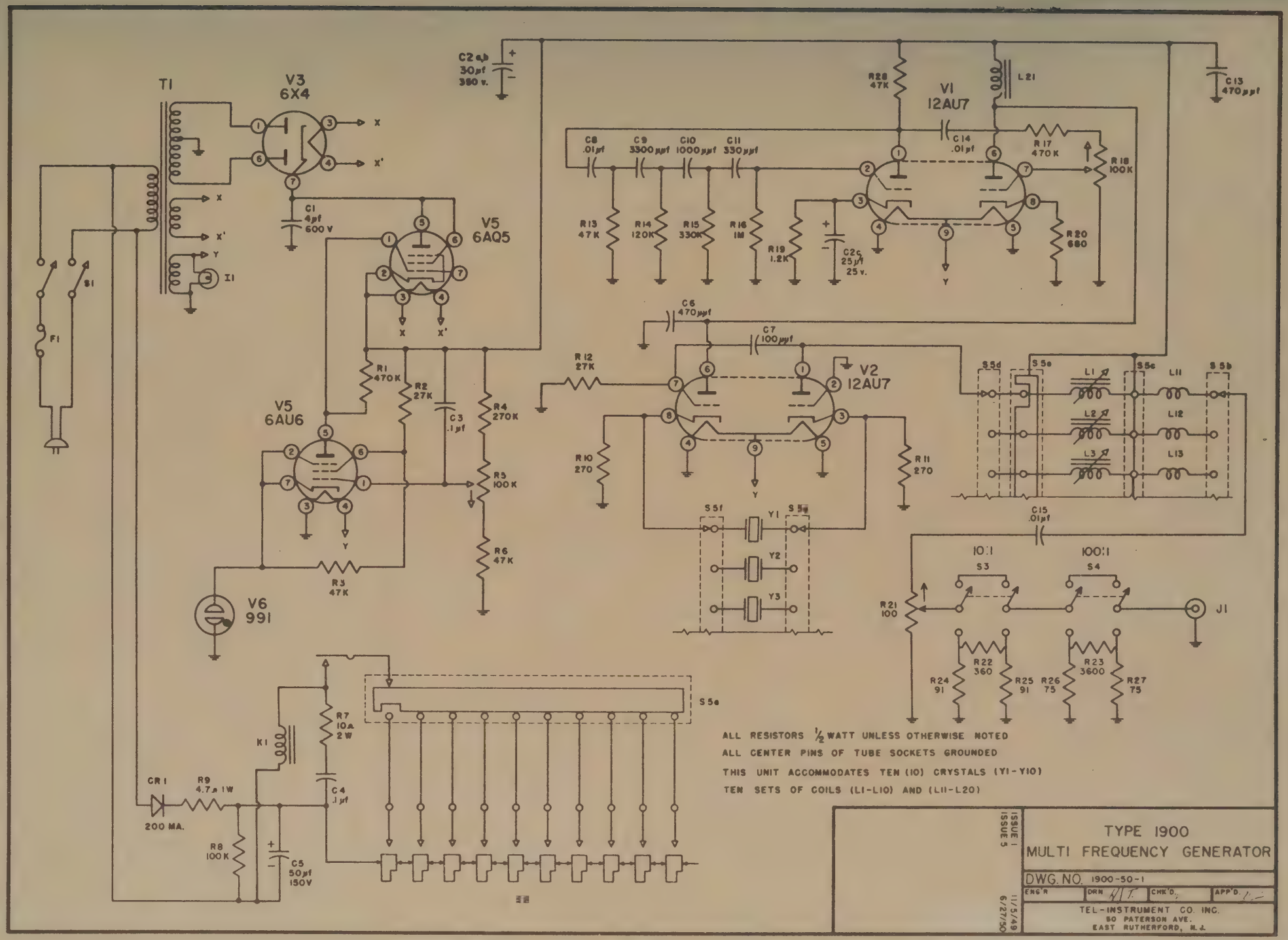
T1
V3
6X4
C2 ab
30µf
350 v.
C1
4µf
600 V
V5
6AQ5
V5
6AU6
V6
991
F1
S1
I1
R1
470K
R2
27K
C3
.1µf
R4
270K
R5
100K
R6
47K
R3
47K
R12
27K
C6
470µµf
C7
100µµf
V2
12AU7
R10
270
R11
270
S5f
S5g
Y1
Y2
Y3
S5d
S5e
S5c
S5b
L1
L2
L3
L11
L12
L13
C15
.01µf
10:1
S3
100:1
S4
R21
100
J1
R22
360
R23
3600
R24
91
R25
91
R26
75
R27
75
R28
47K
V1
12AU7
L21
C13
470µµf
C8
.01µf
C9
3300µµf
C10
1000µµf
C11
330µµf
C14
.01µf
R17
470K
R18
100K
R13
47K
R14
120K
R15
330K
R16
1M
R19
1.2K
C2c
25µf
25 v.
R20
680
S5a
R7
10A
2W
K1
C4
.1µf
CR1
200 MA.
R9
4.7Ω 1W
R8
100K
C5
50µf
150V
ALL RESISTORS ½ WATT UNLESS OTHERWISE NOTED
ALL CENTER PINS OF TUBE SOCKETS GROUNDED
THIS UNIT ACCOMMODATES TEN (10) CRYSTALS (Y1-Y10)
TEN SETS OF COILS (L1-L10) AND (L11-L20)
ISSUE 1
ISSUE 5
6/27/50
11/5/49
TYPE 1900
MULTI FREQUENCY GENERATOR
DWG. NO. 1900-50-1
ENG'R
DRN
CHK'D.
APP'D.
TEL-INSTRUMENT CO. INC.
80 PATERSON AVE.
EAST RUTHERFORD, N.J.

5 copies 7/16

TYPE-1900

MULTI-FREQUENCY GENERATOR

INSTRUCTION BOOK

•

Tel-Instrument Co. Inc.
30 PATERSON AVENUE
EAST RUTHERFORD, N. J.

TEL INSTRUMENT TYPE 1900
MULTI-FREQUENCY GENERATOR

INSTRUCTION BOOK

GENERAL

The type 1900 Multi-Frequency Generator is a 10 frequency, 400 cps modulated, crystal controlled oscillator intended for the preliminary alignment of stagger tuned IF amplifiers of television receivers. Crystals ranging from 17 to 40 mc can be provided to exact frequencies specified. Crystals are arranged in sequence specified by the customer. The frequency accuracy is better than .05% and the modulation is adjustable from zero to approximately 30% by an internal control. Frequency selection is instantly accomplished by means of a special coin silver contact rotary switch actuated by a heavy duty pulsing solenoid and front panel push buttom selector switch. The output signal is 0.5 volts across a 75 ohm terminated output cable 4 feet long. The output signal is capable of attenuation over a range of 1000 to 1. The power supply is electronically regulated to assure complete freedom from line voltage fluctuations from 105 to 125 volts.

The instrument is contained in a grey wrinkle finished cabinet 12-1/2" wide, 9-1/2" deep, and 8" high. Shielding is adequate to prevent excessive radiation. New crystal frequencies may be installed at any time by returning the unit to the factory. The only charge is for the new crystals.

GUARANTEE

This instrument is guaranteed to be free from any defect in material and workmanship, except vacuum tubes, fuses, and batteries, that may develop within a period of 90 days from date of purchase under the terms of the standard RMA guarantee. Any part or parts that prove defective within this period will be replaced without charge when subjected to examination at our factory providing such defect is, in our opinion, due to faulty workmanship or material, and not caused by tampering, abuse, or normal wear.

Tel-Instrument Company, Inc. reserves the right to make changes in design or add improvements to instruments manufactured by them without incurring any obligation to install such changes or improvements in any instrument previously purchased.

THEORY OF OPERATION

This unit utilizes a 12AU7 dual triode as a cathode-coupled crystal oscillator. Referring to the schematic diagram, the left hand section of the tube operates as a cathode follower, cathode driving the grounded-grid right-hand section through the crystal.

At the series resonant frequency of the crystal, it appears as a low resistance (of about 50 ohms), and hence sufficient drive to the grounded grid section is obtained to sustain oscillation. At frequencies slightly removed, the crystal impedance rises, and hence the drive drops. At frequencies far removed from resonance, the impedance of the plate tank of the grounded-grid section drops, preventing spurious oscillation. Unused oscillator plate coils are shorted out to eliminate suck-outs. The output cable termination has a .01 mfd blocking condenser built in, so that connection can be made to any point in the receiver.

The audio oscillator is of the phase-shift type. The resistors and condensers forming the plate-to-grid coupling are chosen so that the net phase shift is 180° at approximately 400 cps. This phase shift, plus the 180° contributed by the tube, satisfies one of the conditions of oscillation, the other being met by designing the amplifier for sufficient gain to offset the loss in the phase-shift network. The second half of the audio oscillator tube is used as a Heising modulator for the crystal oscillator, with modulation percentage controllable from 0 to 30% by adjusting R-18.

The power supply employs a full wave rectifier, feeding a standard degenerative voltage regulator. The frequency-changing rotary switch is operated by a pushbutton operated pulsing relay, which receives its operating power from a separate selenium rectifier and filter condenser. A spark suppression circuit is placed across the relay-stopping contacts to eliminate arcing.

MAINTENANCE

All of the tubes in this unit, with the exception of the RF oscillator, may be removed for testing by simply opening the top cover of the cabinet. In order to remove the RF oscillator tube, it is necessary to remove the unit from the cabinet and remove the bottom plate. Replacement of the RF oscillator might necessitate retuning of the oscillator coils. This is accomplished by removing the unit from the cabinet and removing the shield plate on the left hand side of the RF unit. Connect an RF voltmeter across the output cable, set the attenuators at 1:1, and the variable attenuator at 10. Depress pushbutton 1, adjust the slug at about 7 o'clock position for maximum output. Depress pushbutton 2, and similarly adjust the next clockwise screw. Continue this procedure for each of the remaining positions, and then replace the shield plate.

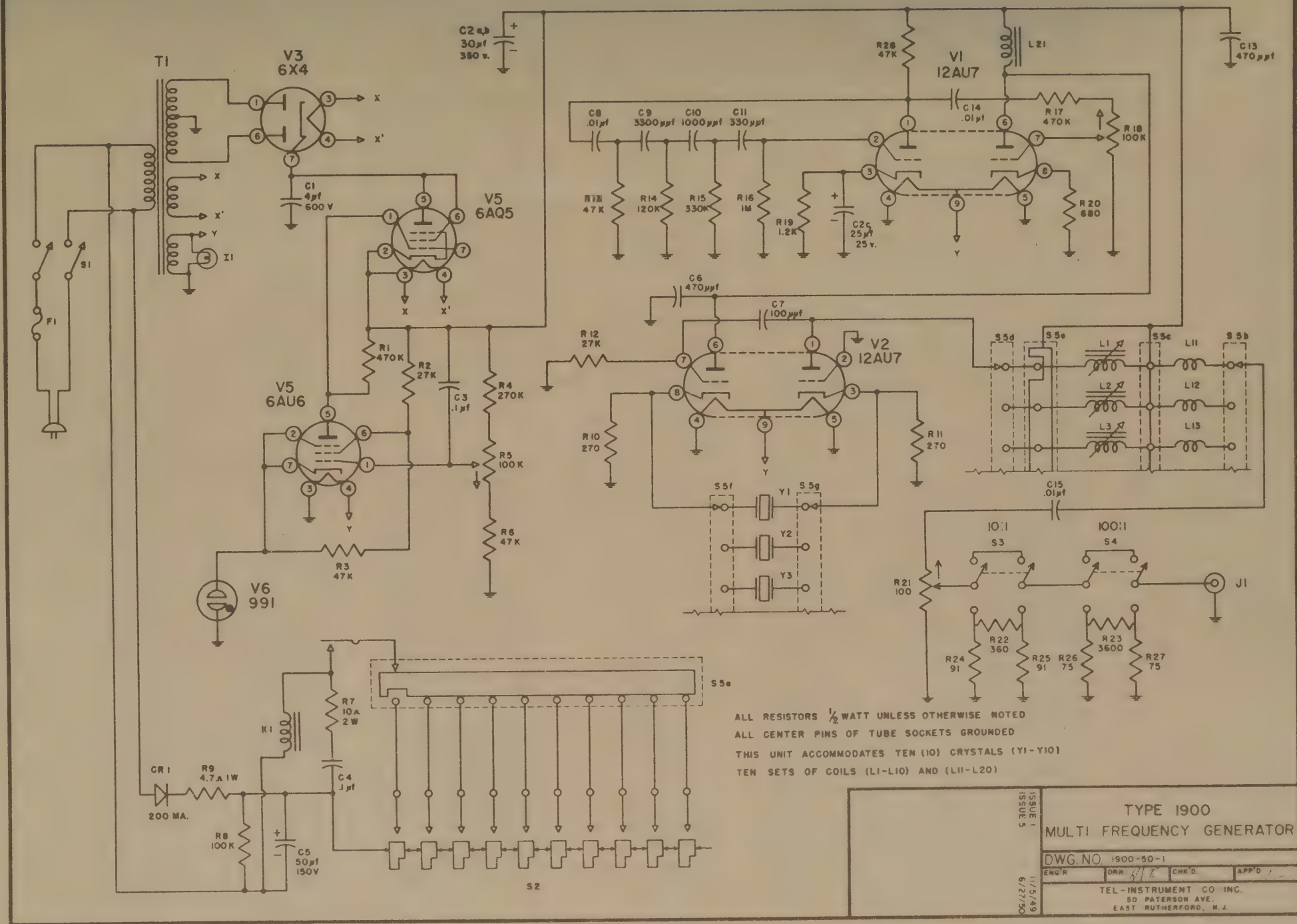
T1
V3
6X4
C1
4µf
600 V
V5
6AQ5
V5
6AU6
V6
991
R1
470K
R2
27K
C3
.1µf
R4
270K
R5
100K
R6
47K
R3
47K
C2a,b
30µf
350 v.
C8
.01µf
C9
3300µµf
C10
1000µµf
C11
330µµf
R13
47K
R14
120K
R15
330K
R16
1M
R19
1.2K
C2c
25µf
25 v.
R28
47K
V1
12AU7
L21
C14
.01µf
R17
470K
R18
100K
R20
680
C13
470µµf
C6
470µµf
C7
100µµf
R12
27K
V2
12AU7
R10
270
R11
270
S5d
S5e
S5c
S5b
L1
L2
L3
L11
L12
L13
S5f
S5g
Y1
Y2
Y3
C15
.01µf
10:1
S3
100:1
S4
R21
100
J1
R22
360
R23
3600
R24
91
R25
91
R26
75
R27
75
S5a
R7
10Ω
2W
K1
C4
.1µf
CR1
200 MA.
R9
4.7Ω 1W
R8
100K
C5
50µf
150V
S2
ALL RESISTORS ½ WATT UNLESS OTHERWISE NOTED
ALL CENTER PINS OF TUBE SOCKETS GROUNDED
THIS UNIT ACCOMMODATES TEN (10) CRYSTALS (Y1-Y10)
TEN SETS OF COILS (L1-L10) AND (L11-L20)
ISSUE 1
ISSUE 5
11/5/49
6/27/50
TYPE 1900
MULTI FREQUENCY GENERATOR
DWG. NO. 1900-50-1
ENG'R
DRN
CHK'D.
APP'D
TEL-INSTRUMENT CO INC.
50 PATERSON AVE.
EAST RUTHERFORD, N.J.

TEL INSTRUMENT TYPE 1900
MULTI-FREQUENCY GENERATOR

INSTRUCTION BOOK

GENERAL

The type 1900 Multi-Frequency Generator is a 10 frequency, 400 cps modulated, crystal controlled oscillator intended for the preliminary alignment of stagger tuned IF amplifiers of television receivers. Crystals ranging from 17 to 40 mc can be provided to exact frequencies specified. Crystals are arranged in sequence specified by the customer. The frequency accuracy is better than .05% and the modulation is adjustable from zero to approximately 30% by an internal control. Frequency selection is instantly accomplished by means of a special coin silver contact rotary switch actuated by a heavy duty pulsing solenoid and front panel push buttom selector switch. The output signal is 0.5 volts across a 75 ohm terminated output cable 4 feet long. The output signal is capable of attenuation over a range of 1000 to 1. The power supply is electronically regulated to assure complete freedom from line voltage fluctuations from 105 to 125 volts.

The instrument is contained in a grey wrinkle finished cabinet 12-1/2" wide, 9-1/2" deep, and 8" high. Shielding is adequate to prevent excessive radiation. New crystal frequencies may be installed at any time by returning the unit to the factory. The only charge is for the new crystals.

GUARANTEE

This instrument is guaranteed to be free from any defect in material and workmanship, except vacuum tubes, fuses, and batteries, that may develop within a period of 90 days from date of purchase under the terms of the standard RMA guarantee. Any part or parts that prove defective within this period will be replaced without charge when subjected to examination at our factory providing such defect is, in our opinion, due to faulty workmanship or material, and not caused by tampering, abuse, or normal wear.

Tel-Instrument Company, Inc. reserves the right to make changes in design or add improvements to instruments manufactured by them without incurring any obligation to install such changes or improvements in any instrument previously purchased.

THEORY OF OPERATION

This unit utilizes a 12AU7 dual triode as a cathode-coupled crystal oscillator. Referring to the schematic diagram, the left hand section of the tube operates as a cathode follower, cathode driving the grounded-grid right-hand section through the crystal.

At the series resonant frequency of the crystal, it appears as a low resistance (of about 50 ohms), and hence sufficient drive to the grounded grid section is obtained to sustain oscillation. At frequencies slightly removed, the crystal impedance rises, and hence the drive drops. At frequencies far removed from resonance, the impedance of the plate tank of the grounded-grid section drops, preventing spurious oscillation. Unused oscillator plate coils are shorted out to eliminate suck-outs. The output cable termination has a .01 mfd blocking condenser built in, so that connection can be made to any point in the receiver.

The audio oscillator is of the phase-shift type. The resistors and condensers forming the plate-to-grid coupling are chosen so that the net phase shift is 180° at approximately 400 cps. This phase shift, plus the 180° contributed by the tube, satisfies one of the conditions of oscillation, the other being met by designing the amplifier for sufficient gain to offset the loss in the phase-shift network. The second half of the audio oscillator tube is used as a Heising modulator for the crystal oscillator, with modulation percentage controllable from 0 to 30% by adjusting R-18.

The power supply employs a full wave rectifier, feeding a standard degenerative voltage regulator. The frequency-changing rotary switch is operated by a pushbutton operated pulsing relay, which receives its operating power from a separate selenium rectifier and filter condenser. A spark suppression circuit is placed across the relay-stopping contacts to eliminate arcing.

MAINTENANCE

All of the tubes in this unit, with the exception of the RF oscillator, may be removed for testing by simply opening the top cover of the cabinet. In order to remove the RF oscillator tube, it is necessary to remove the unit from the cabinet and remove the bottom plate. Replacement of the RF oscillator might necessitate retuning of the oscillator coils. This is accomplished by removing the unit from the cabinet and removing the shield plate on the left hand side of the RF unit. Connect an RF voltmeter across the output cable, set the attenuators at 1:1, and the variable attenuator at 10. Depress pushbutton 1, adjust the slug at about 7 o'clock position for maximum output. Depress pushbutton 2, and similarly adjust the next clockwise screw. Continue this procedure for each of the remaining positions, and then replace the shield plate.

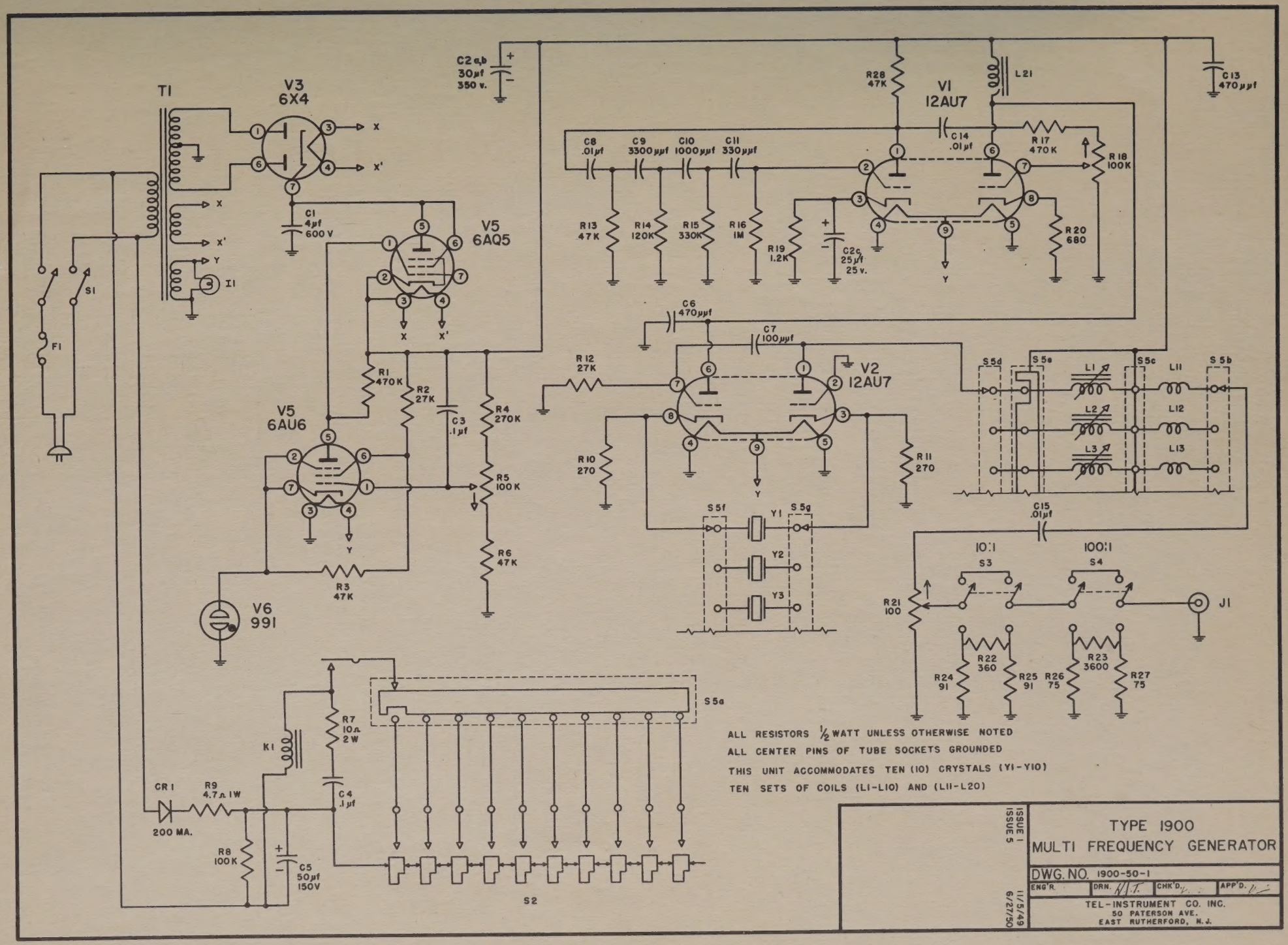
T1
V3
6X4
C2 a,b
30µf
350 v.
C1
4µf
600 V
V5
6AQ5
V5
6AU6
V6
991
F1
S1
I1
R1
470K
R2
27K
C3
.1µf
R4
270K
R5
100K
R6
47K
R3
47K
R12
27K
C6
470µµf
C7
100µµf
V2
12AU7
R10
270
R11
270
S5f
Y1
S5g
Y2
Y3
R28
47K
V1
12AU7
L21
C13
470µµf
C8
.01µf
C9
3300µµf
C10
1000µµf
C11
330µµf
C14
.01µf
R17
470K
R18
100K
R13
47K
R14
120K
R15
330K
R16
1M
R19
1.2K
C2c
25µf
25 v.
R20
680
S5d
S5e
S5c
S5b
L1
L2
L3
L11
L12
L13
C15
.01µf
10:1
S3
100:1
S4
R21
100
J1
R22
360
R23
3600
R24
91
R25
91
R26
75
R27
75
S5a
R7
10Ω
2W
K1
C4
.1µf
CR1
R9
4.7Ω 1W
200 MA.
R8
100K
C5
50µf
150V
S2
ALL RESISTORS ½ WATT UNLESS OTHERWISE NOTED
ALL CENTER PINS OF TUBE SOCKETS GROUNDED
THIS UNIT ACCOMMODATES TEN (10) CRYSTALS (Y1-Y10)
TEN SETS OF COILS (L1-L10) AND (L11-L20)
ISSUE 1
ISSUE 5
6/27/50
11/5/49
TYPE 1900
MULTI FREQUENCY GENERATOR
DWG. NO. 1900-50-1
ENG'R.
DRN.
CHK'D.
APP'D.
TEL-INSTRUMENT CO. INC.
50 PATERSON AVE.
EAST RUTHERFORD, N.J.